Pyxis

DATASHEET

Chemtrol
Leader in Chemical Automation Since 1976

CR-200 & CR-300

Wireless & Inline LPR Corrosion Rate Sensors

CR-200

LPR Corrosion Sensors -vs- Corrosion Coupons

The use of the LPR corrosion rate represents a valuable tool that can be easily and affordably deployed to provide both general and localized corrosion measurements in an instantaneous format. There is a common industrial misnomer that the use of inline LPR corrosion sensors should be identical to that of corrosion coupons. The LPR corrosion level represents the real-time electrochemical measurement of corrosion. While it may be linear with respect to the corrosion rate obtained from the weight loss of a coupon exposed to water for a long period, the LPR corrosion rate may not necessarily be the same exact value of the latter. The instantaneous nature of the device measurement represents a "real-time condition" on an MPY scale based on the specific metallurgy being assessed and will in many cases vary, in a short time scale, from a corrosion coupon. The LPR data should be used to best understand the linear relationship with coupons and for real-time application performance assessment and adjustment.

The Pyxis CR-200/300 corrosion rate sensors are ideal for cooling and process water treatment monitoring where robustness and affordability are a must. The sensors utilize the linear polarization resistance (LPR) method to produce a raw signal. The raw signal is conditioned, amplified, and digitized directly in the sensor itself. This avoids the interferences and attenuation of the raw signal caused by long-distance wiring needed for other corrosion probes to a separate signal conditioner or transmitter box. The Pyxis corrosion sensors measure sample water conductivity directly and compensate for the conductivity impact on the LPR measurement. These unique product characteristics make the Pyxis LPR superior in performance and accuracy. In addition to the LPR measurement to obtain the general corrosion rate, the CR-200/300 sensors also measure electrochemical noise. The measured noise data is used to calculate an index to quantify the localized corrosion rate also referred to as pitting.

CR-300

Typical Applications

- Cooling & Process Water Monitoring
- Domestic Water Monitoring

Features

The **CR-300** is a standalone sensor that can be powered by a 24 VDC power source such as an existing controller or PLC. The **CR-200** is a battery powered and Bluetooth® enabled corrosion sensor for true wireless connectivity. The CR-200 makes it possible to monitor corrosion at multiple test points, avoiding the complications of running power and signal output wires from the sensor to a controller and/or display unit. The CR-200 sensor can store up to 6-months' worth of data that can be wirelessly using the uPyxis APP for Mobile or Desktop devices.

The CR-300 when used with the MA-CR Pyxis Bluetooth Adapter, and the CR-200 as a stand-alone device can both communicate with any smart device via the **uPyxis** app. The uPyxis app, available for all smart phones and computers, is used to configure and obtain current sensor readings. Additional diagnostic information is available and can be used for determining the sensor performance or the need for maintenance.

- Anti-electromagnetic interference (anti-EMI) design with stainless steel sensor body
- MODBUS support with isolated RS-485 communication
- 4-20mA Output
- Battery life up to 1 year thru using our ultra-low power design and smart power management
- Three O-ring grooves positioned on the sensor body allow insertion depth control
- Bluetooth connectivity to uPyxis app
- Ultra-low corrosion rate down to 0.001 MPY
- Accurately Measure Generalized Corrosion & Localized Corrosion Rate

CR-200 Dimensions

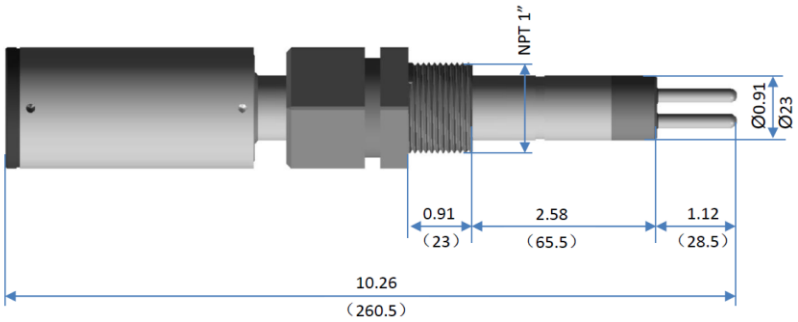

CR-300 Dimensions

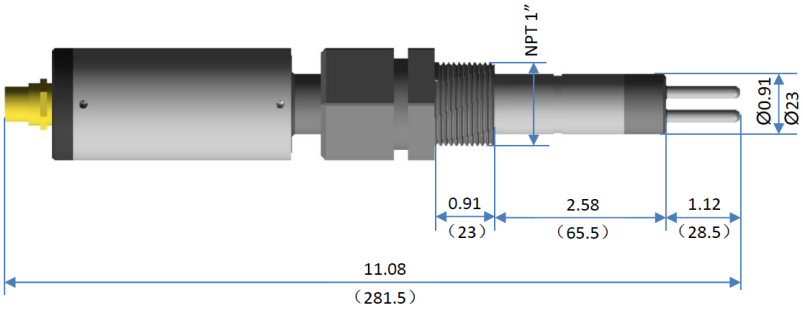

AUSTRALIA CHEMTROL Smart. Clean. Simple

Specifications

	CR-200	CR-300
Part Number	51006	51007
Power Supply	3.6V ER26500 battery	24VDC, 2W
Output	Bluetooth 4.1 32 ft. (10 Meters) Line of Sight	Modbus RTU and 4-20 mA dual output
Data Storage	6 months (30 minutes per sample)	N/A
Dimensions	10.3-inch (260.5 mm) long 0.9 in (23.0 mm) diameter lower 1.7 in (43.0 mm) upper	11.1-inch (281.5 mm) long 0.9 in (23.0 mm) diameter lower 1.7 in (43.0 mm) upper
Weight	655 g with battery	687 g
Cable Length	N/A	5 ft. (1.5 m), extension cable available
General Corrosion Range	0.001 - 10 MPY	
Conductivity Compensation	10 - 10,000 µS/cm	
Sample Temperature	-20 - 50°C	
Reading Interval	3 to 1440 minutes	5 to 1440 minutes
Resolution	0.001 MPY	
Alloy Factor	0 - 3 (1 as default)	
Installation	Flow cell with 1-inch NPT	
Enclosure Material	304 stainless steel	
Working Pressure	Up to 100 psi (7 bar)	
Temperature	Working: -10 - 50 °C Storage: -20 - 70 °C	
Protection	IP65	
Regulation	CE	

AUSTRALIA CHEMTROL Smart. Clean. Simple

CR-200/CR-300 Product & Accessories Selection Guide

PYXIS CORROSION SENSOR - SELECT*A*GUIDE

Functional Capability	CR-200	CR-300
Part #	51006	51007
General Corrosion (0.001 - 10mpy)	X	X
Pitting Corrosion (0.001 - 100mpy)	X	X
5' Connecting Cable Included 4-20mA/RS485		X
Calibration Caps Included (2.0 & 0.1mpy) - 1each	X	X
USB Adapter For CR300 Configuration		X
Bluetooth Output / Lithium Battery Powered	X	
4-20mA/RS485 24V Powered / Wired To Controller or Display		X
		

PYXIS LPR CORROSION SENSOR ACCESSORIES

Accessory Name / Description	Part #	Photo
MA-10CR - 10' Cable for CR300 LPR Sensor	50741	
MA-20CR - 20' Cable for CR300 LPR Sensor	50742	
MA-50CR - 50' Cable for CR300 LPR Sensor	50743	
MA-100CR - 100' Cable for CR300 LPR Sensor	50744	
MA-4.9CR - 4.9 ' Cable For CR300 LPR Sensor	50745	
MA-1.5CR - 1.5 Meter Connection Cable For CR300 w Flying Leads	50746	
CR-200 3.6V ER26500 Battery	50730	
2.0 MPY Calibration Cap	51010	
0.1 MPY Calibration Cap	51011	
CR-300 WiFi/Bluetooth Adapter - 8Pin	MA-CR	
CE-01 Mild Steel Electrode Pair	51002	
CE-02 Copper Electrode Pair	51003	
CE-03 304 Stainless Electrode Pair	51004	
CE-04 Admiralty Brass Electrode Pair	51005	
CE-05 Aluminum 6061 Electrode Pair	51006	

Test Metal Electrodes & uPyxis APP Configuration

The uPyxis APP manages all Pyxis portable meter and inline sensors on mobile and desktop devices, including Apple iPhones and Samsung Android smartphones. When connected to the Pyxis CR series corrosion rate sensors, the uPyxis APP enables users to configure the sensor for the specific metallurgy desired as well as name the sensor, system and data log frequency in addition to offering live corrosion rate data trending. For the CR-200 users may wirelessly transfer up to 6 months of General Localized Corrosion Data via email as a CSV file. For wireless access to CR-300, the MA-CR Bluetooth Adapter will be required. For wireless access to CR-200, no adapter is required as Bluetooth is contained within the sensor itself. ***Note*** The uPyxis Mobile APP is evolving rapidly and users can find the latest version at no cost on Apple iStore or Google Play.

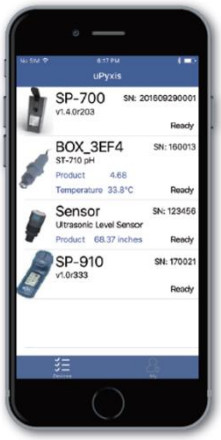

Common Designation	UNS	Alloy Factor	Default 4–20mA General Corrosion Scale (MPY)	Default 4–20mA Localized Corrosion Scale (MPY)
Pipe Grate Carbon Steel	A135	1.00	0–10	0–100
Aluminum AA1100	A91100	0.94	0–10	0–100
Aluminum AA2024	A92024	0.86	0–10	0–100
Aluminum AA6061	A96061	0.94	0–10	0–100
Copper 110 ETP	C11000	2.00	0–1	0–10
Arsenical Admiralty Brass CDA443	C44300	1.67	0–1	0–10
Phosphorized Admiralty Brass CDA445	C44500	1.68	0–1	0–10
Aluminum Silicon Bronze CDA642	C64200	1.48	0–1	0–10
Aluminum Brass Arsenical CDA687	C68700	1.62	0–1	0–10
Cu/Ni - 70/30	C71500	1.50	0–1	0–10
Mild Steel C1010	G10100	1.00	0–10	0–100
Mild Steel C1015	G10150	1.00	0–10	0–100
Mild Steel C1018	G10180	1.00	0–10	0–100
Mild Steel C1019	G10190	1.00	0–10	0–100
Mild Steel C1020	G10200	1.00	0–10	0–100
Mild Steel C1080	G10800	1.00	0–10	0–100
Common Lead	L50045	2.57	0–0.5	0–1
Stainless Steel 304	S30400	0.89	0–0.5	0–10
Stainless Steel 304L	S30403	0.89	0–0.5	0–10
Stainless Steel 316	S31600	0.90	0–0.5	0–10
Stainless Steel 316L	S31603	0.90	0–0.5	0–10
Duplex Stainless Steel 2205 - F51	S31803	0.90	0–0.5	0–10
Duplex Stainless Steel 2507 - F53	S32750	0.90	0–0.5	0–10